# 3", 4" and 5" Bottom Connected Industrial Thermometers

*A sturdy straight form design commonly used for industrial applications and OEM equipment.*

INTER INSTRUMENT

## ➤ MODEL CODES:

| | |
|---|---|
| **BC-350R** | 3" diameter head with calibration feature |
| **BC-450R** | 4" diameter head with calibration feature |
| **BC-550R** | 5" diameter head with calibration feature |

## ➤ SPECIFICATIONS:

| | |
|---|---|
| Stem Lengths: | 2½", 4", 6", 9", 12", 15", 18" and 24" (available up to 120"). |
| Stem Diameter: | .250" standard up to 42" stem.<br>.375" standard over 42" stem. |
| Connection: | ½" NPT. |
| External Reset: | Easy to calibrate by inserting Allen wrench into reset opening. |
| Construction: | 304 stainless steel external parts. Welded construction.<br>Corrosion resistant to most chemicals. |
| Hermetic seal: | Per ASME B40.3 dustproof and leakproof. |
| Dial: | True Anti-Parallax dial, easy-to-read from any angle, minimizes reading errors.<br>Anodized aluminum with large black numbers and graduations. |
| Lens: | Glass. |
| Bimetal Coil: | Helix coil is silicone coated on ranges below 500°F for vibration dampening and to maximize heat transfer and response time. |
| Accuracy: | ±1% full span per ASME B40.3 Grade A. |
| Over Temperature Limits: | Up to 250°F 100%; 250°F to 550°F, 50%; 550°F to 1000°F, continuous use up to 800°F, intermittent use over 800°F. |

MADE IN USA

**Tel-Tru Manufacturing Company**
408 St. Paul St., Rochester, New York 14605 USA
Phone: 716-232-1440 • 800-232-5335 • Fax: 716-232-3857 • E-mail: info@teltru.com • Web: www.teltru.com

## STANDARD RANGES:

| Fahrenheit | °/Div. | Celsius | °/Div. | Dual Fahrenheit | Dual Celsius |
|---|---|---|---|---|---|
| -100/100 | 2° | -75/175 | 5° | -100/100 | -75/40 |
| -50/120 | 2° | -70/70 | 1° | -40/160 | -40/70 |
| -40/160 | 2° | -50/100 | 1° | 0/140 | -18/60 |
| 0/140 | 1° | -50/25 | 1° | 0/180 | -18/82 |
| 0/180 | 2° | -50/50 | 1° | 0/220 | -10/100 |
| 0/200 | 2° | -40/70 | 1° | 0/250 | -20/120 |
| 0/220 | 2° | -20/120 | 1° | 20/240 | -10/110 |
| 0/250 | 2° | -10/110 | 1° | 25/125 | -5/50 |
| 0/300 | 5° | 0/50 | 1/2° | 50/300 | 10/150 |
| 0/500 | 10° | 0/60 | 1° | 50/400 | 0/200 |
| 20/240 | 2° | 0/80 | 1/2° | 50/500 | 10/260 |
| 25/125 | 1° | 0/100 | 1° | 150/750 | 50/400 |
| 50/250 | 2° | 0/150 | 1° | * 200/1000 | * 100/550 |
| 50/300 | 2° | 0/200 | 2° | | |
| 50/400 | 5° | 0/250 | 2° | | |
| 50/500 | 5° | 0/300 | 5° | | |
| 50/550 | 5° | 0/400 | 5° | | |
| 100/800 | 10° | 0/450 | 5° | | |
| 150/750 | 10° | 100/400 | 5° | | |
| * 200/1000 | 10° | * 100/550 | 5° | | |

(Additional Ranges Available – Consult factory)

* Thermometers with temperature ranges 200/1000°F and 100/550°C are NOT RECOMMENDED FOR CONTINUOUS USE ABOVE 800°F/425°C (FOR INTERMITTENT USE ONLY).

## OPTIONS:

- Stem Position available in TOP (12:00), RIGHT (3:00), or LEFT (9:00) side connections (specify position of stem when ordering).
- Union connection or other connection types and sizes.
- Silicone filled.
- Other lenses are acrylic, polycarbonate, shatterproof glass or tempered glass.
- Other stem diameters .236" (6mm), .315" (8mm), .375" (9.5mm).
- 316SS wetted parts.
- Other configuration combinations available upon request.

| Estimated Shipping Weights | | |
|---|---|---|
| MODEL | DRY | SILICONE FILLED |
| BC-350R | 14 oz. | 1 lb. 1 oz. |
| BC-450R | 1 lb. 3 oz. | 1 lb. 9 oz. |
| BC-550R | 1 lb. 10 oz. | 2 lb. 4 oz. |

## FOR HOW TO ORDER, SEE PAGE 6

## BC-350R, BC-450R AND BC-550R

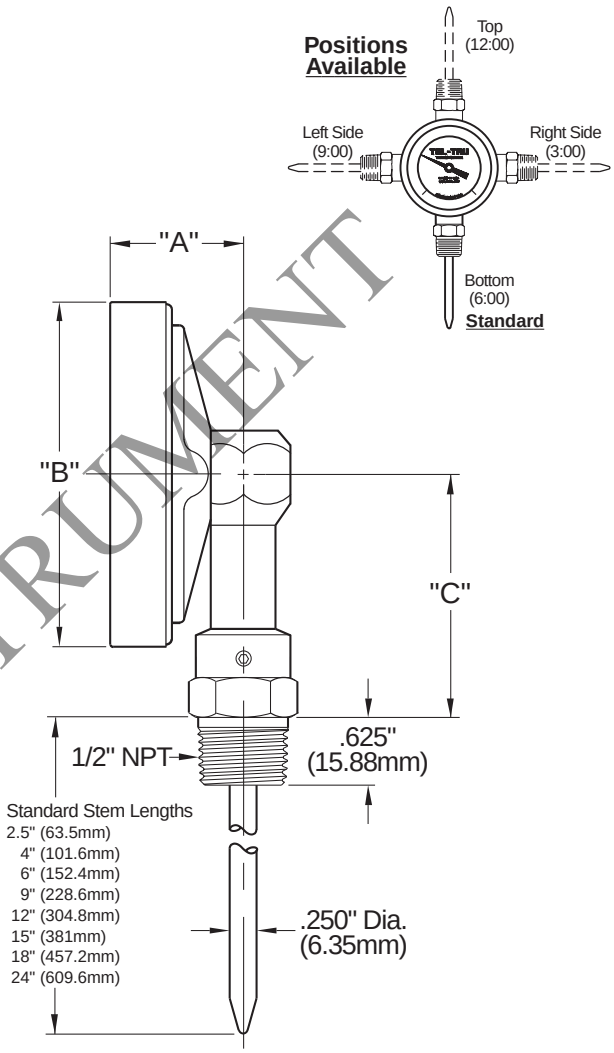


| MODEL | "A" | "B" | "C" |
|---|---|---|---|
| BC-350R | 1.187" (30.15mm) | 3.187" (80.95mm) | 2.300" (58.42mm) |
| BC-450R | 1.187" (30.15mm) | 4.115" (104.50mm) | 3.000" (76.20mm) |
| BC-550R | 1.625" (41.28mm) | 5.040" (128.02mm) | 3.000" (76.20mm) |

## IMPORTANT NOTES:

1) Thermowells are recommended for pressure, corrosive fluid or high velocity applications.
2) ASME B40.3— Bimetal thermometers manufactured by Tel-Tru and offered in this brochure are designed to meet or exceed this Standard issued by the American Society of Mechanical Engineers.

INTER INSTRUMENT